Sub-Miniature Rocker Switch

(TYPE): SMRS-101-2

(Specification)

1. (Rating):6A 125V AC; 3A 250V AC
2. (Contact R):35mΩ max
3. (Insulation R):500V DC 100MΩ min
4. (Dielectric Strength):1 Minute 1500V AC
5. (Operating Temperature):-25℃～+85℃
6. (Electrical Life):10, 000 Cycles

(Outline Drawing)

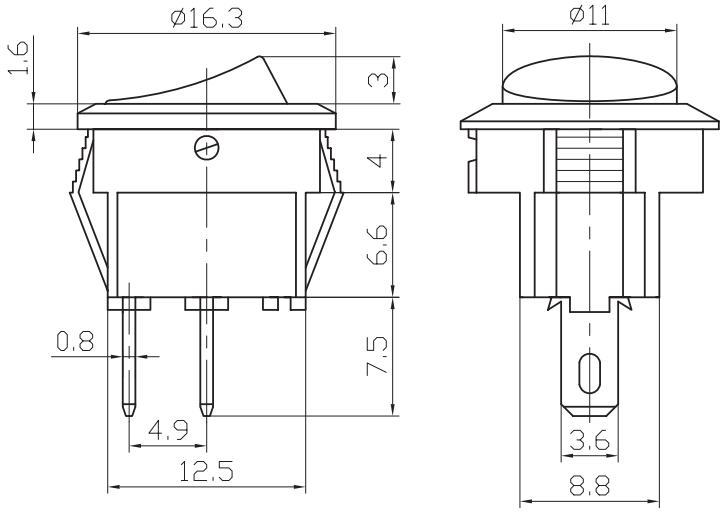

(Mounting)

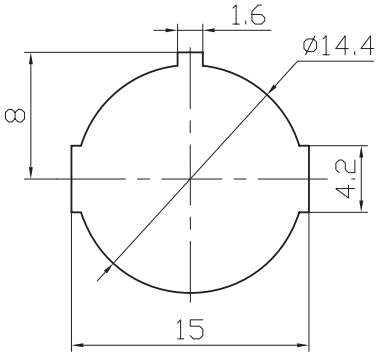
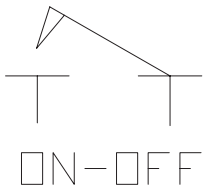
(Circuitry)