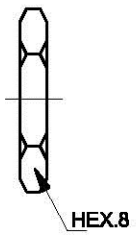

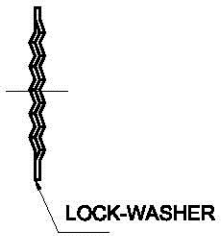

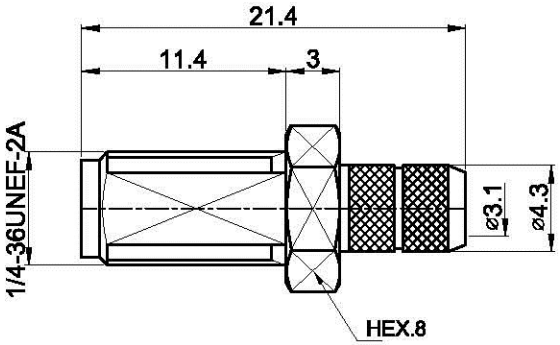

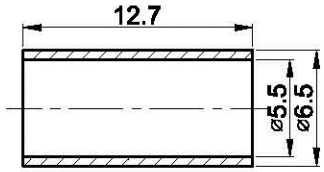

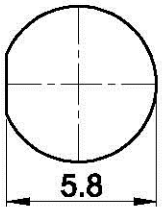

RECOMMENDED
MOUNTING HOLE

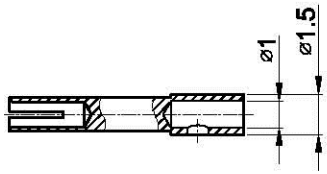

NO.	Part Name	Q'TY	Material/Spec	Surface Finish
3	Insulator	1	Teflon & PTFE	———
2	Contact Pin	1	Brass	Gold Flash
1	Body, Nut	1	Brass	Gold Flash

P / N	MWSMAJPAN.223	third angle drawing			
Code		Weight	Scale	Edition	page NO.
DWG No.		/		A/0	1/1
Material	———	MARLOW			