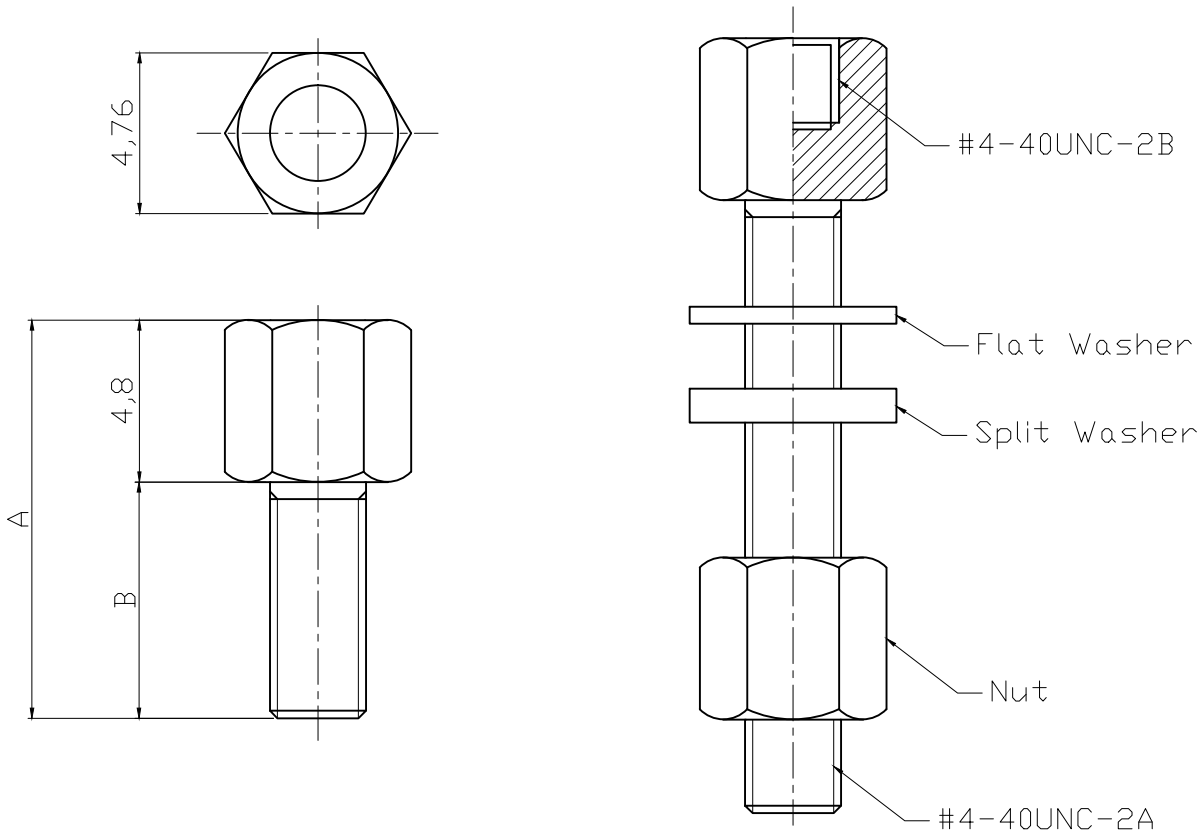

② Material: Brass
② Plating: Nickel
④ Recommended torque force: 2~3 Kgf

Dimensions ③	
A	11.8
B	7

RoHS compliant
Unit: mm

Scale	Free
TOLERANCE	
X.X	±0.38
X.XX	±0.25
X.XXX	±X
DIM	TOL
X.°	±X°
X.X°	±X°
Angle	TOL

Id.	Modification	Date	Name
④	Add torque force	28.06.2019	Xavier
③	Remove surplus dimensions	06.11.2013	Amy
②	Update	11.11.2011	Lucas
①	Drawn	16.12.2008	Dean

	Date	Name
Drawn	16.12.2008	Dean
Approved	06.11.2013	Amy

ASSMANN WSW components

Customer-No.

ASSMANN WSW-No. ASV-U/Z

Drawing-No. ASS 3218A CO rev04

Replace

Sheet 1/1